2 PANEL CENTER OPENING DOOR
WIDE JAMB (STRAIGHT) WITH TRANSOM PANEL - SL-2X TYPE

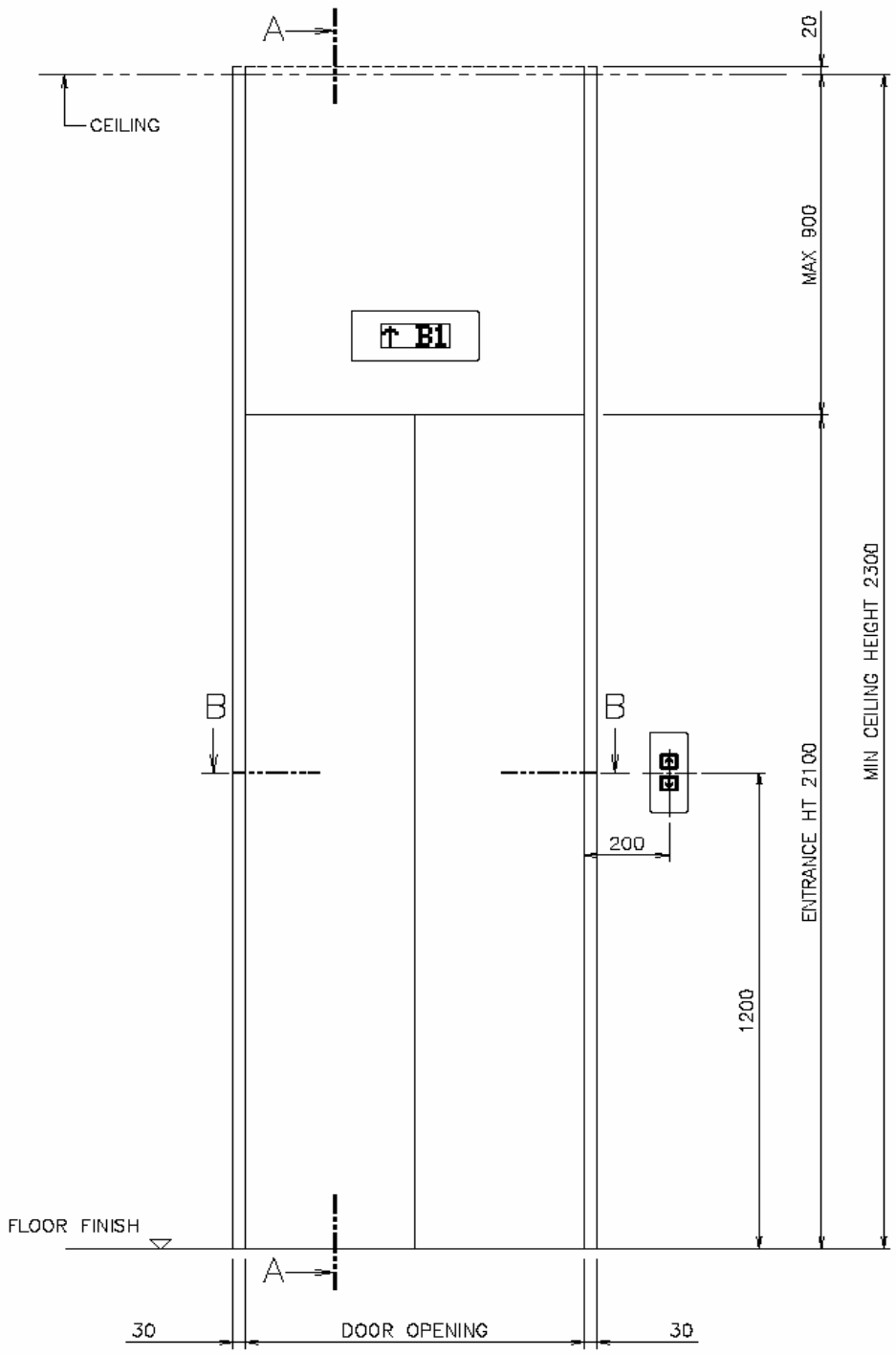

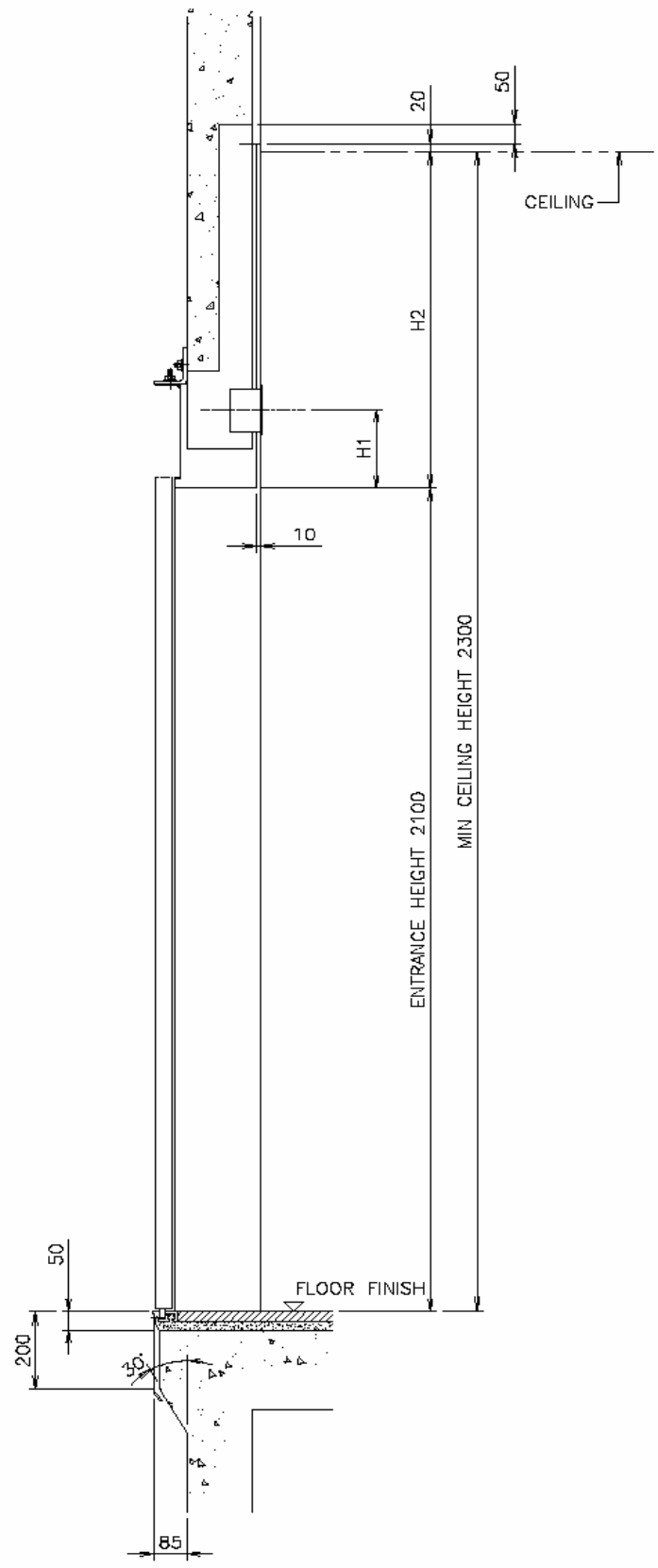

A—A SECTION

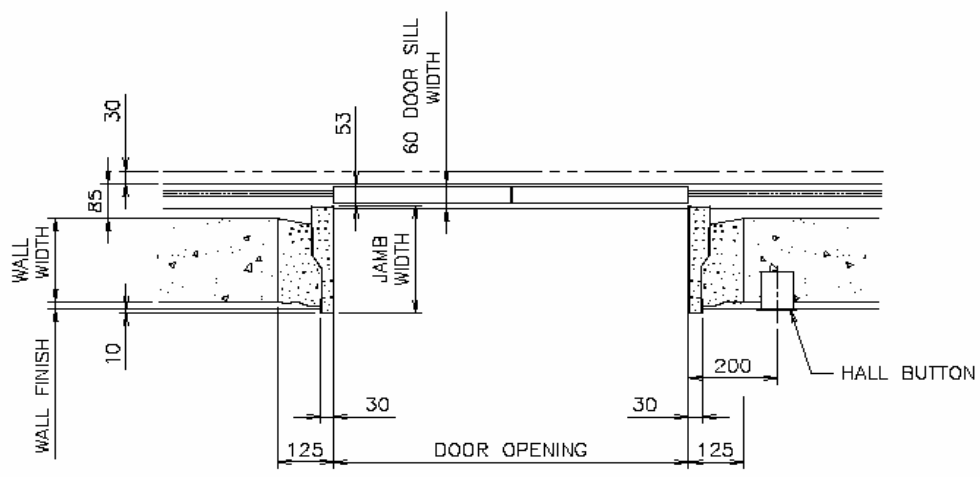

B—B SECTION

© Hitachi Asia Ltd. 2007. All rights reserved.

Hitachi Asia Ltd. Elevator / Escalator Division
10 Toh Guan Road East, Hitachi Elevator Building, Singapore 608597 Tel: +65 6416 1711 Fax: +65 6561 0991 (Main)/ 0766 (Sales & Engrg)
Company No. : 198900416G
http://www.hitachi.com.sg/eles